DEGSON ELECTRONICS CO., LTD.

Product Specification

15EDGKAM-3.5
15EDGKAM-3.81

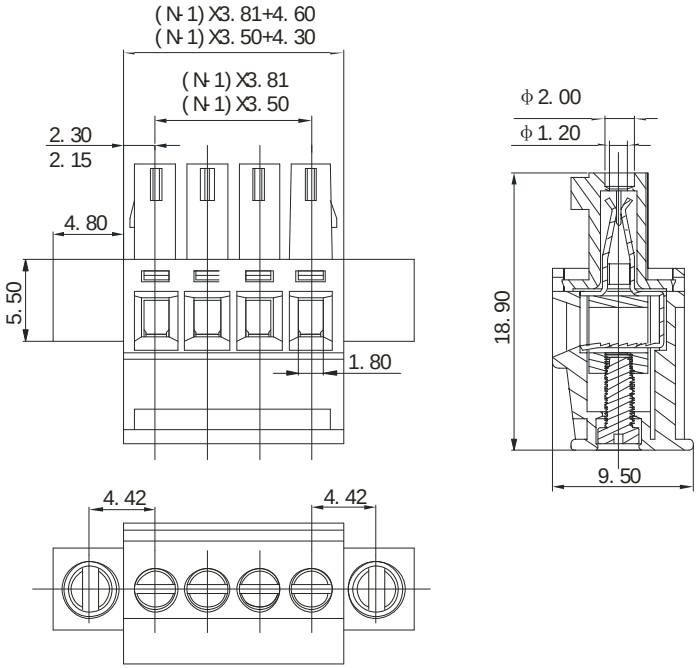

APPROVAL		
Electrical		
Standard	**UL**	**IEC**
Rated voltage	300V	250V
Rated current	8A	7A
Wire range	28-16AWG	0.5-1.5mm^2
Withstanding voltage	AC2000V/1Min	
Mechanical		
Torque	0.2Nm(1.7Lb-In)	
Ambient temperature	-30℃~+120 ℃	
Strip length	7mm	
Dimensions		
Pitch	3.5mm(.138″) 3.81mm(.150″)	
Poles	2P-20P	
Material		
Housing	PBT,UL94V-0	
Screws	M2,Steel,Cr^{3+}Zn-plated	
Contact	Phosphor bronze	
Cage	Brass,Ni-plated	

HOW TO ORDER :

[ ] – [ ][ ] P — 1 [ ] — X X X Customer Request

Series number

No.of pole

1	Single pitch
2	Double pitch

Color

1	Grey	4	Green	7	Trans Parent
2	Blue	5	Orange	8	Yellow
3	Black	6	Red	9	White

mm (INCH)	DEGSON ELECTRONICS CO., LTD.	
THIRDANGLE PROJECTION	NAME	15EDGKAM-3.5, 15EDGKAM-3.81